Pag.

[illegible]

[illegible]

[illegible]

[illegible] intensity [illegible] "[illegible] of [illegible] [illegible] the conductivity [illegible] support for a "[illegible] [illegible]" descending [illegible] [illegible] that were undertaken with the object of finding if the dielectric surrounding wire had any influence on its electric conductivity. I made use [illegible] of a copper wire with eight different dielectrics -- liquids and vapors -- and concluded that in general the conductivity was [illegible], in some cases increased, and in others decreased, to a little over 25 per cent.

In a later paper on "A Hypothesis Modifying [illegible] Law", he referred to a similar observation [illegible] the conductivity of a gilt wire, but [illegible] that [illegible] wire.

[illegible] Electricity, [illegible]

[illegible]

[illegible]

"[illegible]

[illegible]

[illegible]

[illegible]

[illegible]

[illegible] through an insulating opening in the other end plate, where it is soldered to a piece of long cast iron of [illegible] which by means of it is connected with the "Theatre of Light". Another similar piece of long cast iron is soldered to the end of the tube through which the wire passes, and is likewise connected with the lamp. Midway between the ends of the tube is another tube 7 cm. long and [illegible] diameter and [illegible] from the side. This tube serves to admit the thermometer by which the temperature of the interior of the lamp tube is measured."

"The current used for [illegible] experiments [illegible] way through the tube and [illegible] the lamp. [illegible] is known that the field of force of a current to be measured is confined within the tube, and the walls of the dielectric conductor [illegible] [illegible] [illegible] will."

[illegible]

[illegible] the deflection of a spot of light w[illegible] [illegible]. This deflection was plainly noticeable for a change of resistance corresponding to .0001 ohm in the wire [illegible] tube and on reversal of the current reversal time, it was possible to detect a deflection for a change corresponding to one-fifth of the above. The new measurements were carried out with a final error of accuracy to .00001 ohm. [illegible] the combined resistance of the wire and tube was about .[illegible] ohm. This [illegible] of [illegible] to measure by just .03 of one per cent error."

"The effect of current through the wire and tube was always between the same [illegible] first and last differences. The [illegible] and the wire all rose on the temperature of the [illegible] and as this changed very slowly, only [illegible] could be made in a day."

Dielectric	Dielectric constant	Dielectric constant	Equivalent temp. change	Per cent change
Petroleum	[illegible]	[illegible]	-[illegible].45	-[illegible].18
Methyl alcohol	[illegible]	[illegible] "	-[illegible].25	-[illegible].00
Oil of turpentine	[illegible]	[illegible]		
Ethyl alcohol	[illegible]	[illegible]		
Wood alcohol	.[illegible]	[illegible] "	+[illegible].07	+.0[illegible]
Benzene	.[illegible]	[illegible] "	+[illegible].24	+.[illegible]
Wood alcohol and Benzen	.[illegible]	.[illegible] "	+[illegible].31	.1[illegible]
Absolute alcohol	.[illegible]	+.[illegible] "	+[illegible].43	.1[illegible]
Wood alcohol and Petroleum	.[illegible]	[illegible] "	[illegible].56	+.[illegible]
Iso[illegible]	.[illegible]	[illegible] "	[illegible].2	+.1[illegible]
Chloroform vapor	.[illegible]	+.[illegible] "	+[illegible].30	+.15
Sulfuric Ether vapor	.[illegible]	-.[illegible] "	[illegible]	+.[illegible]
Alcohol vapor	.[illegible]	+.[illegible] "		+.0[illegible]
[illegible] vapor	1.			
Rarefied air	1.			

[illegible]

[illegible]

[illegible] at 21 [illegible]

[illegible] of for [illegible]

2.5 [illegible] the [illegible] temperature of the wire in the [illegible] did [illegible]. But in [illegible] instead of tenths [illegible] room, his tube was heated in a water bath up to 50° and observations for resistance taken as the tube slowly cooled down to the room temperature. He tried only two dielectrics besides air - alcohol and [illegible] - and finding no effect due to these he concluded it was not worth while to try others.

Professor [illegible] retained [illegible] his [illegible] original method throughout, but in his later work he [illegible] a more sensitive [illegible] resistance [illegible]

---

1. Phys. Review Vol. [illegible] p. [illegible] 1905.

2. Phys. Review Vol. [illegible] p. [illegible] 1906.

[illegible]

[illegible]

[illegible]

[illegible]

[illegible]

[illegible]

varying [illegible] from [illegible] to 1. [illegible]
using [illegible] and silver [illegible] found the effect of [illegible] re-
in the surface. [illegible] diameter [illegible]
charge [illegible] effect [illegible] to the dielectri
he found effects with [illegible] 1.5 [illegible] diameter but
on taking another piece from the same spool and hammering it
flat, no change of resistance due to the dielectric oc-
curred. He did not find any definite relation between the
amount of surface covered and the effect due to the dielec-
tric. The amount of the effect seemed to depend on the par-
ticular wire used, [illegible] effect of [illegible] the wires
were the same. From all of [illegible] corrections, he conclude[illegible]
to [illegible] that only a thin film of dielectric [illegible] the
the wire, and [illegible] to the amount [illegible] it. [illegible]
counted in the [illegible] One of the corrections
was [illegible] the surface of the wire was coated with a
layer of paraffin oil [illegible]
wire was replaced in the [illegible] dielectric [illegible] previously
produced a change.

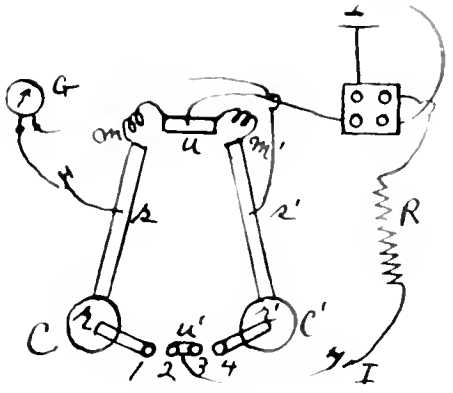
G
m
u
m'
r
s
s'
R
C
u'
C'
1
2
3
4
I

[illegible]

[illegible] 1.5 [illegible]

"The [illegible] n of [illegible] (i.e. [illegible] coil divi[illegible] in [illegible] part of the [illegible]uements to [illegible] of [illegible] .00015 [illegible] By multiplyin[illegible] instruments [illegible] when all [illegible] sources of error [illegible] eliminated, we were able to reach, [illegible] still [illegible] na[illegible]".

[illegible]) [illegible] be [illegible] tied, [illegible] was [illegible]ied [illegible] pump. [illegible] re- [illegible] co- tinued until the deflection [illegible]. A change in the difference of [illegible] was indicated by noting the change in the [illegible] deflection [illegible].

[illegible]

[illegible]

[illegible]

[illegible]

[illegible] *n* [illegible]

[illegible] *bie* [illegible]

	[illegible]	[illegible]
Petrol[illegible]	[illegible]	[illegible]
Air	[illegible] "	[illegible] "
[illegible]	[illegible]	[illegible]

[illegible]

Δ = .0000[illegible]

$\frac{\Delta}{R}$ 0.00[illegible]

Δ

Δ

$\frac{\Delta}{R}$

Fig. "b"

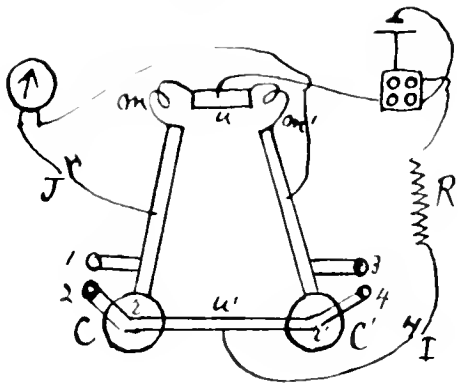

ρ

Δ $\frac{\Delta}{R}$

a

± 0.0004

had

ρ

Δ

$\frac{\Delta}{R}$

s

ℓ

ρ

Δ

Δ

$\frac{\Delta}{R}$

But possibly they used some volatile solvent to free the tube of petroleum;

[ ]

B. and S. gauge

au

w

1 Univ. Circulars, June, 1897.

2

2

2

2

2

2

2

that

Next the copper tube terminates in a flat [illegible] and the measurement of the copper distance again [illegible]

1 2

A.M
9:00

0

1 2

1 2

α

α

α _

0

1 2

2

0. 8 11

2

for 0°.021.

1 2

0

1 2

0.

1 2

2

2

2

1 2

2

2

with

which would correspond in my tube and wire to a decrease of 18 o/o

that of

α

α

1 2

00

0

1 2

d

t

$$\left.\begin{array}{l} {}_1 = 0 \qquad\qquad {}_2 = 0. \end{array}\right\}$$

$$_1 \qquad _2$$

$$0$$

$$_1 = 84 \qquad _2$$

$$_2$$

Vapor

1 2

0

2

2 ε d

0.

of resistance

O.

0

1 0. 2 2 0

1 2

2

2

0.

0

5

29
D

0.2

3

that the

$_1$ $_1$ $0.$ $_2$ $_2$ 0 }

$_1$ $_2$

0

is $_2$ $_2$

2

2

5

0

Fig 4.

1 − 2 0 1 2 0

1 − 2 0.

0

8:00

0.

2

0

0 0

$$\left.\begin{matrix} W_2 & 0. \\ P_2 & \end{matrix}\right\}$$

2

0

2

0

before

s

not true

A

$$\left\{ \begin{matrix} 1 & & &

1 2

0.

2

2

11.

3

7180 6090

4

{

$\frac{1}{1} - 0 \qquad \frac{2}{2}$ }

3

O

Sq

$S_{q\mu}$

$$\left\{ \begin{array}{ll} 0 & 0 \end{array} \right.$$

3

of Chicago

	1		49-50
	1		57
			62
	2		83
			100-1
	1		57-8, 57'
			63-64
III.	1		65-6
	1		68
			71
	2		79
	2		86-90
	2		92
	2		93
	2		96-7

of Philadelphia

no

physicists

Fig. 1

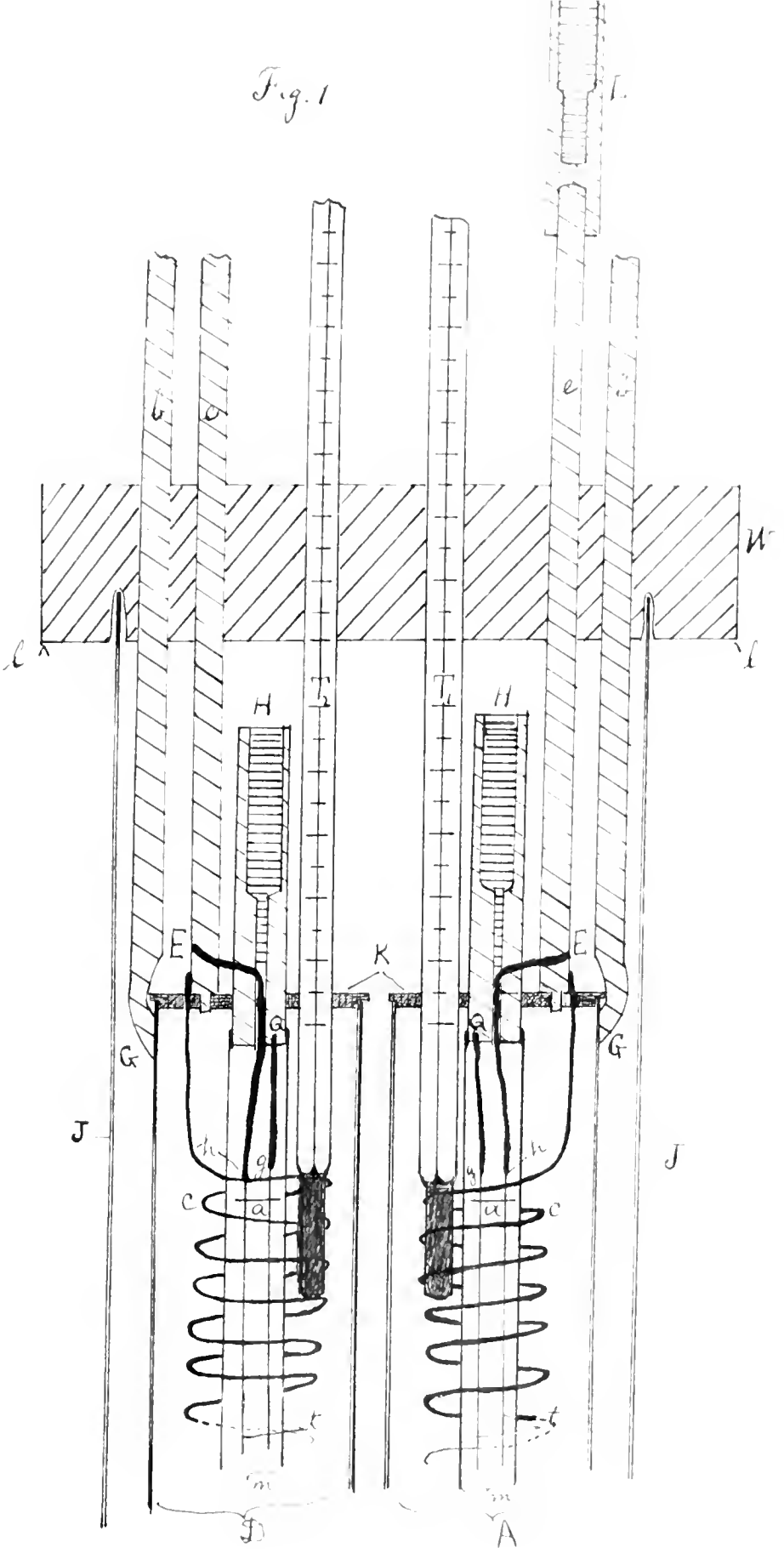

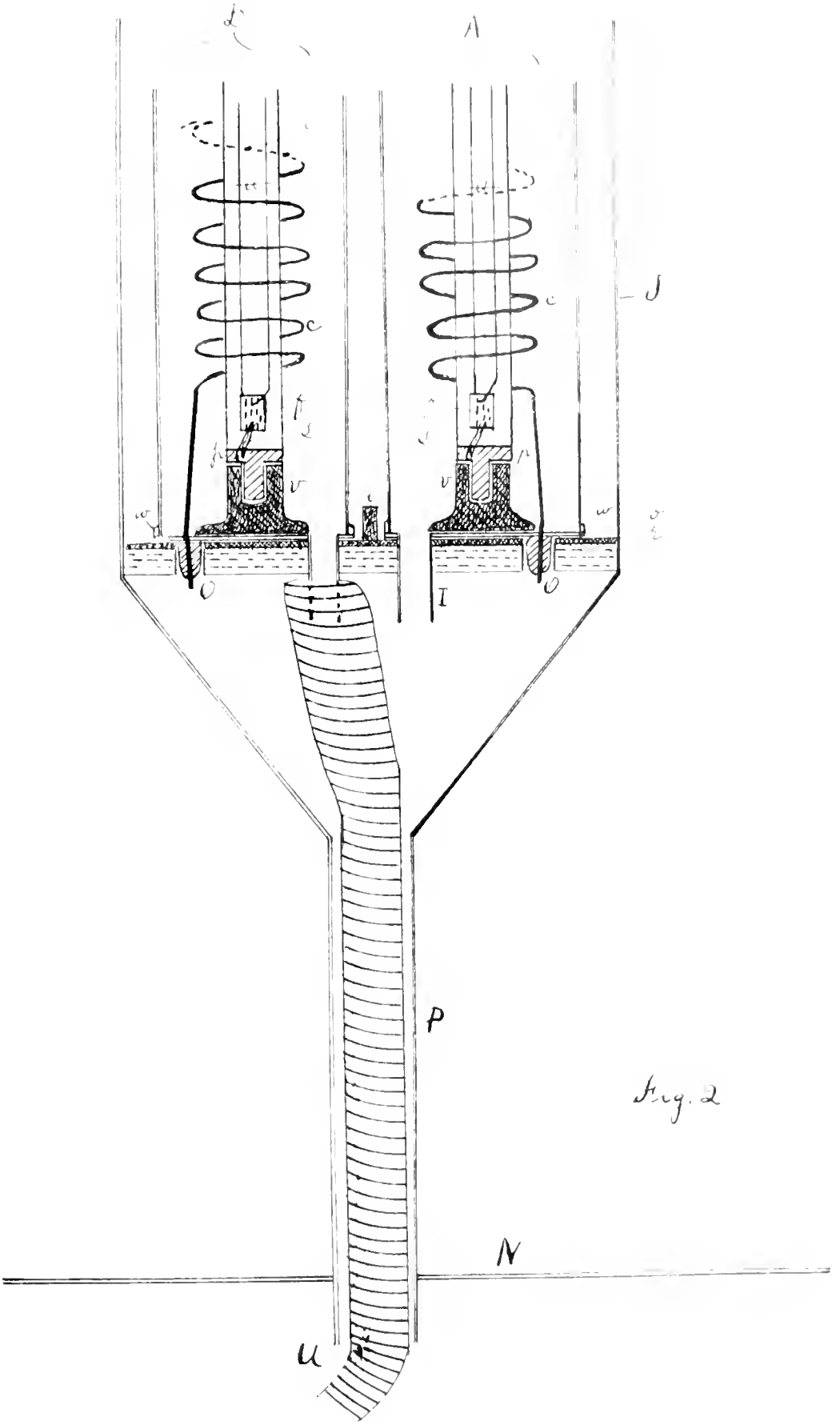

Fig. 2

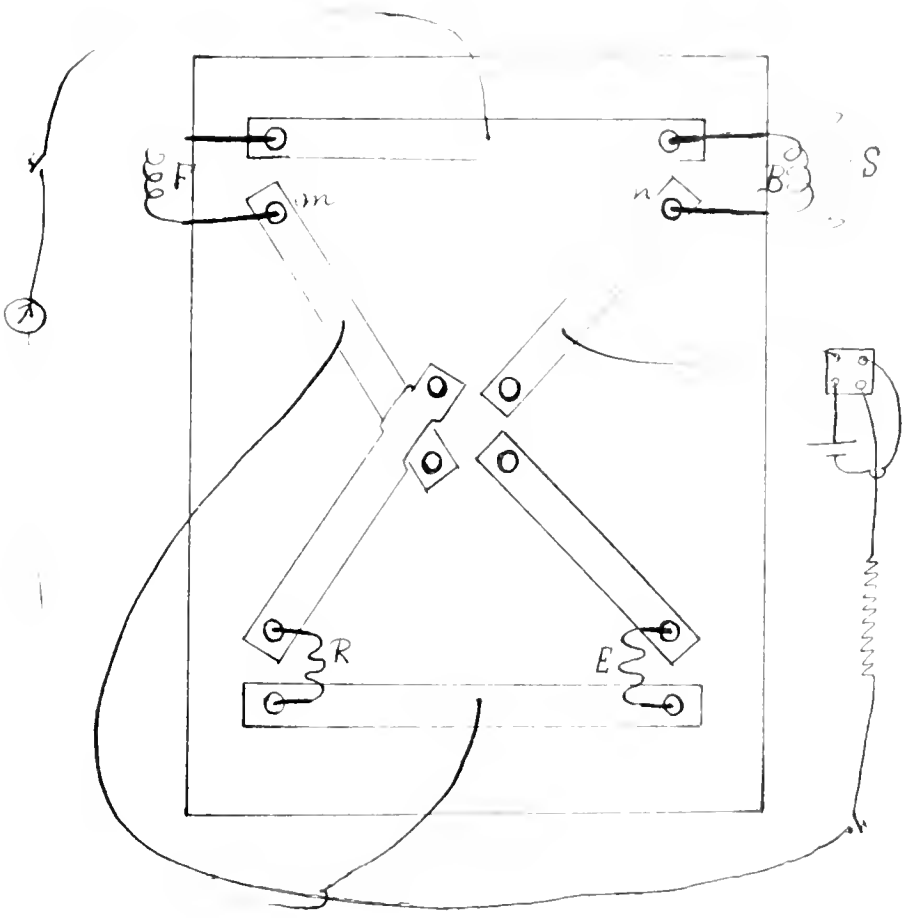

Fig 3